इंटरनेट मानक

Disclosure to Promote the Right To Information

Whereas the Parliament of India has set out to provide a practical regime of right to information for citizens to secure access to information under the control of public authorities, in order to promote transparency and accountability in the working of every public authority, and whereas the attached publication of the Bureau of Indian Standards is of particular interest to the public, particularly disadvantaged communities and those engaged in the pursuit of education and knowledge, the attached public safety standard is made available to promote the timely dissemination of this information in an accurate manner to the public.

"जानने का अधिकार, जीने का अधिकार"
Mazdoor Kisan Shakti Sangathan
"The Right to Information, The Right to Live"

"पुराने को छोड नये के तरफ"
Jawaharlal Nehru
"Step Out From the Old to the New"

IS 13540-1 (1992): Arms and ammunition - 4.5 mm (.177) air rifle and air pistol pellets, Part 1: General purpose [PGD 28: Arms and Ammunition for Civilian Use]

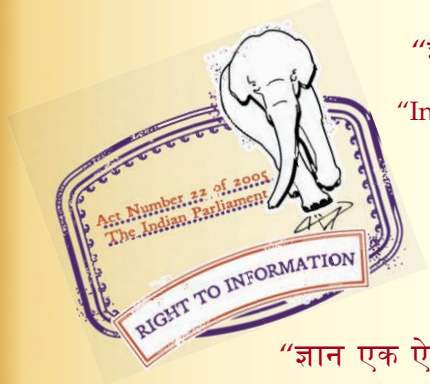

"ज्ञान से एक नये भारत का निर्माण"
Satyanarayan Gangaram Pitroda
"Invent a New India Using Knowledge"

"ज्ञान एक ऐसा खजाना है जो कभी चुराया नहीं जा सकता है"
Bhartṛhari—Nītiśatakam
"Knowledge is such a treasure which cannot be stolen"

BLANK PAGE

PROTECTED BY COPYRIGHT

IS 13540 (Part 1) : 1992

भारतीय मानक

(Reaffirmed 2003)

हथियार और गोला बारूद — 4·5 मि. मी. (·177) एयर रायफल और एयर पिस्तौल की गोलियाँ

भाग 1 सामान्य प्रयोजन

Indian Standard

ARMS AND AMMUNITION — 4·5 mm (·177) AIR RIFLE AND AIR PISTOL PELLETS

PART 1 GENERAL PURPOSE

UDC 623·455·11

© BIS 1992

BUREAU OF INDIAN STANDARDS
MANAK BHAVAN, 9 BAHADUR SHAH ZAFAR MARG
NEW DELHI 110002

December 1992

Price Group 2

FOREWORD

This Indian Standard was adopted by the Bureau of Indian Standards, after the draft finalized by the Arms and Ammunition for Civilian Use Sectional Committee had been approved by the Light Mechanical Engineering Division Council.

Pellets are small spherical ball/shots used in fire arms. The standard specifies various requirements of 4·5 mm pellets. Pellets covered in this specification can be used for both air and CO_2 gas operated rifle/pistol. The requirement for 5·5 mm pellets have been covered in separate standard.

The standard has been formulated in light of the technical practices followed in the country.

For the purpose of deciding whether a particular requirement of this standard is complied with, the final value, observed or calculated, expressing the result of a test or analysis, shall be rounded off in accordance with IS 2 : 1960 'Rules for rounding off numerical values (*revised*)'.

Indian Standard

ARMS AND AMMUNITION — 4·5 mm (·177) AIR RIFLE AND AIR PISTOL PELLETS

PART 1 GENERAL PURPOSE

1 SCOPE

1.1 This standard (Part 1) covers requirements for 4·5 mm (·177) (also called No. 1) lead pellets for general purpose.

1.2 This pellet can also be used with CO_2 gas operated rifles/pistols.

2 REFERENCES

2.1 The following Indian Standards are necessary adjuncts to this standard:

IS No.	*Title*
2500 (Part 1) : 1973	Sampling inspection tables: Part 1 Inspection by attributes and by count of defects (*first revision*)
4905 : 1965	Methods of random sampling

3 DIMENSIONS

3.1 The dimensions/design of pellets shall be as given in Fig. 1.

3.2 Concentricity, Parallelism and Squareness

All the diameters shall be concentric with other diameters and to be within the dimensions of specified tolerance All parallel surfaces shall be parallel to each other to the extent of 0·1 mm. In case of conical head the vertex of the cone shall lie in the centre of the base within a tolerance of 0·1 mm. All vertical surfaces shall be perpendicular to the base within the specified tolerances.

4 MATERIAL

4.1 The material shall be an alloy of lead, tin, antimony, copper etc Lead percentage shall not be less than 98 percent.

5 HARDNESS

5.1 Hardness of the pellets shall be measured after flattening of a suitable surface using a micro hardness tester with a 0·5 kg load or less. While testing there shall be proper support to the pellets. Value of hardness shall be within 6 ± 1 VPN for individual pellets.

6 MASS

6.1 The mass of different type of pellets shall be as given below:

Type of Pellet	*Specified Mass*
a) Spherical head	0·40 ± 0·03 g
b) Conical head	0·45 ± 0·03 g
c) Flat head	0·55 ± 0·02 g

7 TESTS

7.1 Chemical Analysis

Suitable quantity of lead pellets shall be drawn from each lot to ascertain the chemical composition as described in **4**.

7.2 Hardness Test

Five pellets from each lot shall be drawn as random sample to ascertain the hardness as given in **5**. The lot shall be accepted if all the five pellets meet the requirement for hardness.

7.3 Proof

Samples from each lot shall be subjected to the following proofs.

7.3.1 *Velocity*

Ten random sample pellets shall be fired from a fixed weapon of a good condition and of a standard manufacture. The average velocity shall be checked at 10 m and the individual value shall not be less than 140 m/sec. The range (difference between the highest and lowest velocity) shall not be more than 25 m/sec for the same weapon.

NOTE — A weapon of good condition means that it should not have been used for firing more than 5 000 pellets.

7.3.2 *Consistency*

Ten samples each of randomly selected pellets shall be fired on four different targets placed at 10 m from a fixed weapon of a good condition and of standard manufacture. The diameter of the pattern formed shall not exceed 25 mm in any case.

NOTE — A weapon of good condition means that it should not have been used for firing more than 5 000 pellets.

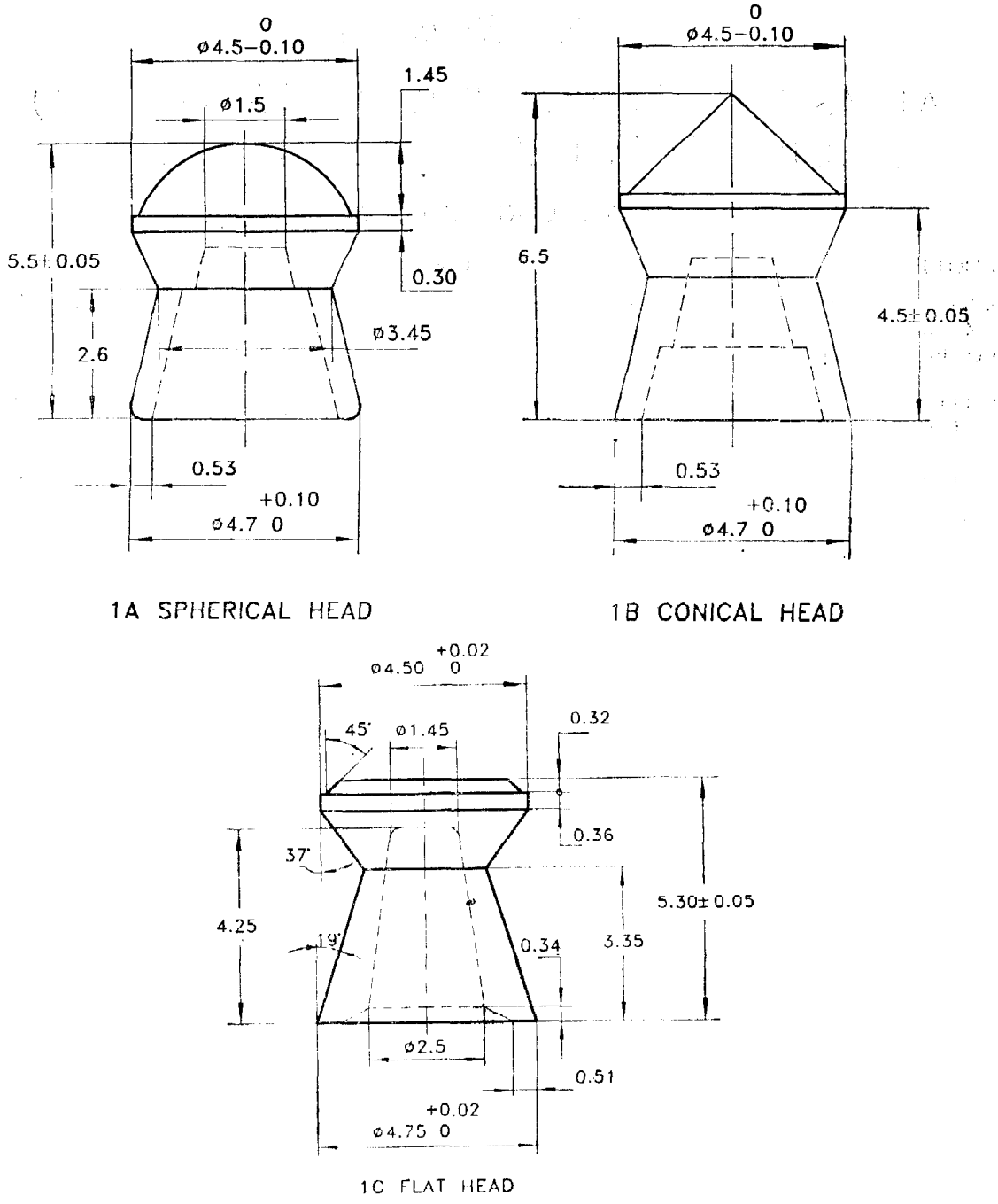

All dimensions in millimetres.

FIG. 1 DIMENSIONS/DESIGN OF PELLETS

8 SAMPLING

8.1 Lot

In a consignment all the pellets of the same type and size manufactured from the same material under similar conditions of production shall be grouped together to constitute a lot.

8.2 Samples shall be drawn from the lot at random. For drawing of random samples reference may be made to IS 4905 : 1965. The type of sampling plan inspection level and value of acceptable quality (AQL) valid for various characteristics shall be as given in **8.2.1**, **8.2.2** and **8.2.3**.

8.2.1 For ascertaining the conformity for critical dimensional and visual requirements, a single

sampling plan with inspection level IV and AQL of 0·1%, as given in Tables 1 and 2 of IS 2500 (Part 1) : 1973.

8.2.2 For ascertaining the conformity for major dimensional and visual requirements, the single sampling plan with inspection level IV and AQL of 1·5%, as given in Tables 1 and 2 of IS 2500 (Part 1) : 1973 shall be followed.

8.2.3 For ascertaining the conformity for minor dimensional and visual requirements, the single sampling plan with inspection level IV and AQL of 2·5%, as given in Tables 1 and 2 of IS 2500 (Part 1) : 1973 shall be followed.

9 CLASSIFICATION OF DEFECTS

9.1 The visual and dimensional defects shall be classified as follows:

9.1.1 *Visual*

Defects	*Critical*	*Major*	*Minor*
a) Air/gas leakage through the centre cavity	+		
b) Blow holes/pin holes/cracks	+		
c) Burr		+	
d) Fins		+	
e) Riser protrusion felt by hand		+	
f) Dents on skirt		+	
g) Riser protrusion visible marks			+

9.1.2 *Gauging and Weighing*

Defects	*Critical*	*Major*	*Minor*
a) Skirt/tail dia beyond the tolerance by 0·1 mm	+		
b) All tolerated dimensions beyond specified by more than 0·1 mm		+	
c) All tolerated dimensions beyond the specification by less than 0·1 mm			+
d) All un-tolerated dimensions beyond the general tolerance			+
e) Mass of the pellet beyond specified limit		+	

9.2 Any other defect which in the opinion of the Inspector will affect the functioning of the pellet considerably may be classified as major and the defects other than mentioned above shall be classified as minor.

10 SENTENCING

The lot shall be sentenced subject to satisfactory performance at velocity, accuracy proofs and taking into the consideration of the results obtained in sampling and other tests.

11 PACKING AND MARKING

11.1 Packing

Packing shall be done in a suitable metallic, plastic or card board container of round, square or rectangular shape and for quantity of 100, 200 or 500 pellets.

11.1.1 *Packing for Transit*

For transit purpose, a number of containers as required shall be packed in a suitable wooden or corrugated box suitably stencilled and finally type banded to make transist worthy. The mass of package shall not exceed 30 kg.

11.2 Marking

Each container shall be marked legibly and indelibly with the following:

a) Maker's name or trade mark/brand name,

b) Air rifle/pistol pellet,

c) Type of pellet alongwith figure,

d) Quantity,

e) Size, and

f) 'Made in India'.

Standard Mark

The use of the Standard Mark is governed by the provisions of the *Bureau of Indian Standards Act, 1986* and the Rules and Regulations made thereunder. The Standard Mark on products covered by an Indian Standard conveys the assurance that they have been produced to comply with the requirements of that standard under a well defined system of inspection, testing and quality control which is devised and supervised by BIS and operated by the producer. Standard marked products are also continuously checked by BIS for conformity to that standard as a further safeguard. Details of conditions under which a licence for the use of the Standard Mark may be granted to manufacturers or producers may be obtained from the Bureau of Indian Standards.

Bureau of Indian Standards

BIS is a statutory institution established under the *Bureau of Indian Standards Act, 1986* to promote harmonious development of the activities of standardization, marking and quality certification of goods and attending to connected matters in the country.

Copyright

BIS has the copyright of all its publications. No part of these publications may be reproduced in any form without the prior permission in writing of BIS. This does not preclude the free use, in the course of implementing the standard, of necessary details, such as symbols and sizes, type or grade designations. Enquiries relating to copyright be addressed to the Director (Publications), BIS.

Review of Indian Standards

Amendments are issued to standards as the need arises on the basis of comments. Standrds are also reviewed periodically; a standard along with amendments is reaffirmed when such review indicates that no changes are needed; if the review indicates that changes are needed, it is taken up for revision. Users of Indian Standards should ascertain that they are in possession of the latest amendments or edition by referring to the latest issue of 'BIS Handbook' and 'Standards Monthly Additions'. Comments on this Indian Standard may be sent to BIS giving the following reference:

Doc : No. LMD 08 (5360)

Amendments Issued Since Publication

Amend No.	Date of Issue	Text Affected

BUREAU OF INDIAN STANDARDS

Headquarters:

Manak Bhavan, 9 Bahadur Shah Zafar Marg, New Delhi 110002
Telephones : 331 01 31, 331 13 75

Telegrams : Manaksanstha
(Common to all offices)

Regional Offices :	Telephone
Central : Manak Bhavan, 9 Bahadur Shah Zafar Marg NEW DELHI 110002	331 01 31 331 13 75
Eastern : 1/14 C. I. T. Scheme VII M, V. I. P. Road, Maniktola CALCUTTA 700054	37 84 99, 37 85 61 37 86 26, 37 86 62
Northern : SCO 445-446, Sector 35-C, CHANDIGARH 160036	53 38 43, 53 16 40 53 23 84
Southern : C. I. T. Campus, IV Cross Road, MADRAS 600113	235 02 16, 235 04 42 235 15 19, 235 23 15
Western : Manakalaya, E9 MIDC, Marol, Andheri (East) BOMBAY 400093	632 92 95, 632 78 58 632 78 91, 632 78 92

Branches : AHMADABAD. BANGALORE. BHOPAL. BHUBANESHWAR. COIMBATORE. FARIDABAD. GHAZIABAD. GUWAHATI. HYDERABAD. JAIPUR. KANPUR. LUCKNOW. PATNA. THIRUVANANTHAPURAM.

Printed at New India Printing Press, Khurja, India